Dimensions (unit : mm)

40mm sq. type

Model : 109-059 Surface treatment : Nickel-chrome plating (silver) Color
: 109-059H : Cation electropainting (black)

Inlet side, Outlet side

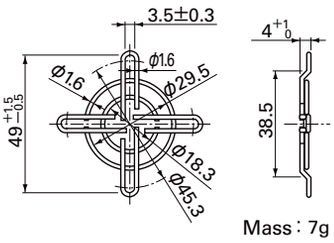

Mass : 7g

Mounting example
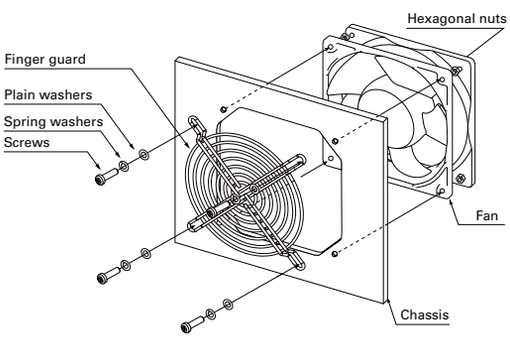
Axial fan